CAMBRO

Camshelving®
GN 2/1 Food Pan Trolley

Project _____

Item No. _____

Model No. _____

Quantity _____

Full Size Rack
Holds 36 each GN 1/1 Food Pans, 2 1/2" (6,5 cm) Deep

Half Size Rack
Holds 18 each GN 1/1 Food Pans, 2 1/2" (6,5 cm) Deep

Features & Benefits

- Versatile end-load trolley for holding, storing and transporting bulk food in GN food pans. Slim, compact profile maximizes working and storage space.
- Durable composite construction with a smooth, easy-clean surface built to withstand demanding kitchen environments.
- Post frame connectors feature a fully enclosed, T-shaped design for greater strength and durability, while eliminating dirt-trapping wells for easier cleaning.
- Engineered with zero metal components–eliminates rust, corrosion, dents, and weak points caused by welds, screws, crossbars, or metal casters.
- Backed by a lifetime warranty against rust and corrosion.
- Performs across all environments, moving effortlessly between kitchen, freezer, cooler, and off-premise locations.
- Rails accept hot pans up to 400˚F (204˚C) directly from the oven.
- Non-marking design prevents metal wipe or residue from metal pans.
- 3" (7,6 cm) rail spacing provides maximum versatility and easy loading.
- Molded-in lip load rails allow pans to hang securely by their flange.
- Food pan holding capacity:

	2½" (6,5 cm)	4" (10 cm)	6" (15 cm)	8" (20 cm)
Full Size Trolley				
1/1 Pans	36 each	18 each	18 each	12 each
Half Size Trolley				
1/1 Pans	18	8	8	6

- Weight Bearing Capacity:
  Each rail set supports up to 40 lbs. (18.1 kg).
  Full-size unit supports 750 lbs. (340 kg).
  Half-size unit supports 375 lbs. (170 kg).
- Premium 5" (12,7 cm) nylon swivel casters with total-lock brakes that secure both swivel and roll. Non-marking thermoplastic rubber wheels are completely corrosion-resistant.
- Easy to clean. Simply wipe down or pressure wash.
- Ships knockdown with casters and bottom frame wedges factory-installed for quick, minimal assembly.
- Modular design: Components can be removed or replaced if damaged, ensuring a lifetime of service.
- Optional accessories: Full Size Vinyl Cover, Full Size Insulated Cover, and Rail Pan Stop.
- Available in Speckled Gray (480).

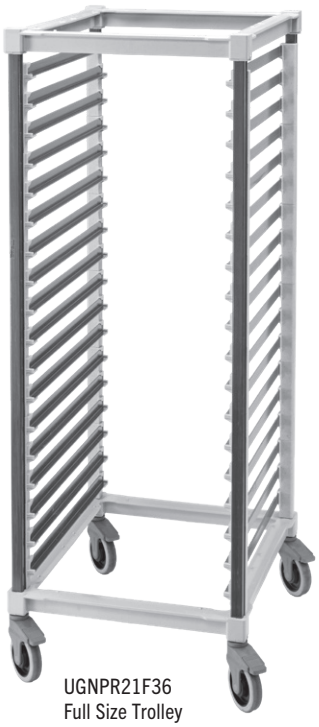

UGNPR21F36
Full Size Trolley



UGNPR21H18
Half Size Trolley

Approvals

NSF

Product SKUs contain NSF-listed components. For or a list of NSF-listed components, search "GN Pan Rack" at https://www.nsf.org/certified-products-systems

CAMBRO

www.cambro.com

Information and specifications are subject to change without notice. Please confirm at time of order.

CAMBRO U.S.A.
TEL: 1(714) 848-1555
FAX: 1(714) 230-4375

CAMBRO EUROPE
TEL: (49) 7022 90 100 0
FAX: (49) 7022 90 100 19
cambroeurope@cambro.com

CAMBRO CHINA
TEL: +86-0752-2885018
FAX: +86-0752-2885038
cambrochina@cambro.com

© Copyright Cambro Manufacturing Company.

Camshelving®
GN 2/1 Food Pan Trolley

Project _____

Item No. _____

Model No. _____

Quantity _____

Full Size Rack
Holds 36 each GN 1/1 Food Pans, 2 1/2" (6,5 cm) Deep

Half Size Rack
Holds 18 each GN 1/1 Food Pans, 2 1/2" (6,5 cm) Deep

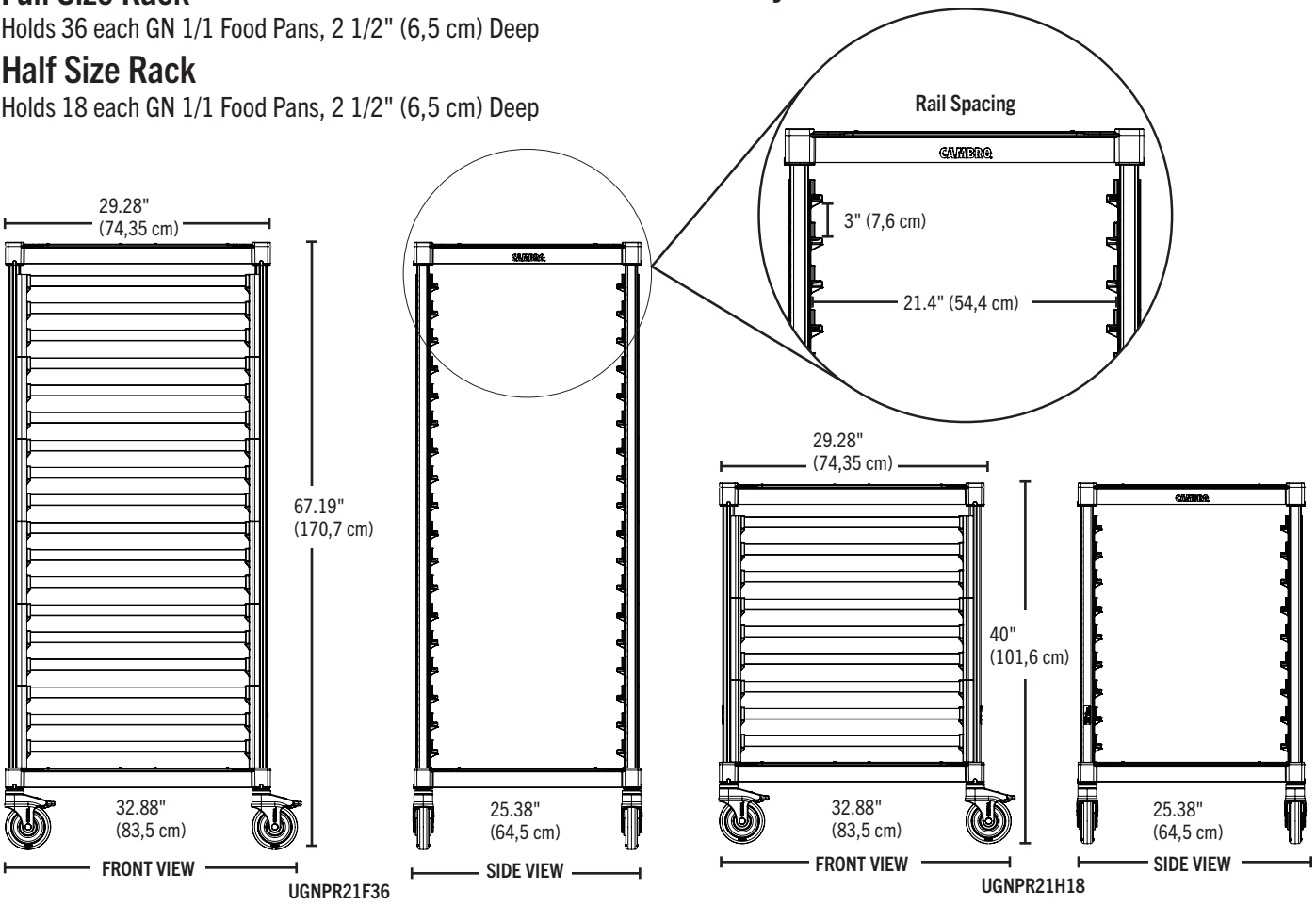

Specifications

Dimension Tolerance: +/- 1/4" (0,64 cm)

Code	Description	Load Capacity	Dimensions D x W x H	Unit Weight
UGNPR21F36	Full Size Trolley	750 lbs. (340 kg)	29.28" x 25.38" x 67.19" (74,35 x 64,5 x 170,7 cm)	51.68 lbs (23,44 kg)
UGNPR21H18	Half Size Trolley	375 lbs. (170 kg)	29.28" x 25.38" x 40" (74,35 x 64,5 x 101,6 cm)	35.10 lbs (15,92 kg)

Optional Accessories

Full Size Pan Stop ❑ UGNPRPSF

Half Size Pan Stop ❑ UGNPRPSH

Standard Colors

❑ Speckled Gray (480)

Architect Specs

Mobile Posts: Proprietary non-corrosive composite material. Post Connector Frames: Reinforced nylon. Side Rail Panels: Proprietary non-corrosive composite material and reinforced polypropylene. Post Connector Frame Wedges: Reinforced polypropylene. Casters: 5" (12,7 cm), plastic nylon frame, metal stem, non-marking thermoplastic wheel, with total locking brake. Units ship knockdown with casters and bottom post connector frame wedges factory assembled onto posts. Holds GN 1/1 size pans only. Weight bearing per rail set is 100 lbs. (45 kg). Full size unit weight bearing is 750 lbs. (340 kg). Half size unit weight bearing is 375 lbs. (170 kg). Lifetime warranty against rust and corrosion. Unit color is Speckled Gray (480).

Approvals

NSF

Product SKUs contain NSF-listed components. For or a list of NSF-listed components, search "GN Pan Rack" at https://www.nsf.org/certified-products-systems

CAMBRO

Information and specifications are subject to change without notice. Please confirm at time of order.

CAMBRO U.S.A.
TEL: 1(714) 848-1555
FAX: 1(714) 230-4375

CAMBRO EUROPE
TEL: (49) 7022 90 100 0
FAX: (49) 7022 90 100 19
cambroeurope@cambro.com

CAMBRO CHINA
TEL: +86-0752-2885018
FAX: +86-0752-2885038
cambrochina@cambro.com

www.cambro.com

© Copyright Cambro Manufacturing Company.

CSUGNPR2

D042601